NOTES

1. OVER VOLTAGE RANGE OF 4.5 TO 24 VDC AND TEMPERATURE RANGE OF -40°C TO +150°C
2. SWITCH IS OFF (RELEASED) WHEN VANE IS IN GAP
3. CHARACTERISTICS MEASURED WITH THE VANE AT NOMINAL DIMENSION AND A 20mA LOAD
4. A 0,79±0,01 THICK CRS (ANNEALED 1010-1018 OR LOWER CARBON) VANE OF SHOWN DIMENSIONS IS TO BE USED WHEN CHECKING MECHANICAL CHARACTERISTICS. VANE CENTER TO BE HELD 5,30±0,05 FROM RIVET CENTERLINE
5. Bo = (MECHANICAL CHARACTERISTICS CENTER REFERENCE POINT), DETERMINED BY THE EQUATION: (A+B+C+D)/4=Bo. OPERATE = TRAILING EDGE TRIGGER POINT. RELEASE = LEADING EDGE TRIGGER POINT. DIFFERENTIAL = OPERATE MINUS RELEASE (A - C)
6. ABSOLUTE MAXIMUM RATINGS ARE THE EXTREME LIMITS THE DEVICE WILL WITHSTAND WITHOUT PERMANENT DAMAGE TO THE DEVICE. HOWEVER, DEVICE OPERATION IS NOT GUARANTEED AS MAXIMUM LIMITS ARE APPROACHED
7. MAX RISE TIME IS BASED ON 4700 pF +20% -10% CAPACITOR FROM OUTPUT TO COMMON (GROUND) AND SUPPLY TO COMMON (GROUND)
8. THIS DIMENSION TO BE MEASURED FROM BASE OF IC TOWER TO MAGNET FACE. STEADY STATE DEFLECTION AT TOP OF IC TOWER MAY NOT EXCEED 0,10 ABSOLUTE, RELATIVE TO DATUM A
9. THIS DIMENSION TO BE MEASURED FROM BASE OF IC TOWER TO RIVET CENTERLINE
10. LEADS SECURED BY PRESS FIT BRACKET (STAPLE); 1.5 POUND MINIMUM RETENTION
11. EPOXY IN THIS AREA MAX. 0,3 HEIGHT PERMISSIBLE
12. CATALOG LISTING AND DATE CODE MARKED THIS SURFACE
13. A POSITIVE DELTA OPERATE MEANS THE OPERATE POINT IS MOVING AWAY FROM Bo. A POSITIVE DELTA RELEASE MEANS THE RELEASE POINT IS MOVING TOWARD Bo. DELTAS ARE REFERENCED FROM CHARACTERISTIC MEASUREMENT AT 12 VDC AND 25°C

14- WIRES ARE 24 AWG CROSS-LINKED POLYETHYLENE

2AV56

ABSOLUTE MAXIMUM RATINGS (6)

SUPPLY VOLTAGE (Vs)	-40 TO +30
VOLTAGE EXTERNALLY APPLIED TO OUTPUT	+40 VDC MAX WITH SWITCH IN "OFF" CONDITION ONLY -0.8 VDC MIN WITH SWITCH IN "ON" OR "OFF" CONDITION
LOAD ON OUTPUT	40 mA 5 MIN, MAX
TEMPERATURE	-40°C TO 160°C 2 HR MAX
TRANSIENT SUPPLY VOLTAGE	+80 V FOR 250mSEC MAXIMUM
TRANSIENT SUPPLY CURRENT	-.5 AMP TO +.5 AMP FOR 15 MICROSEC MAX
TRANSIENT OUTPUT CURRENT	-.5 AMP TO +.5 AMP FOR 15 MICROSEC MAX

ELECTRICAL CHARACTERISTICS (1)

	25°C TYP	CURRENT SINK MAX	REMARKS
SUPPLY CURRENT	10.5mA	22 mA	PLUS LOAD CURRENT
OUTPUT VOLTAGE (OPERATED) (ON)	0.15	0.4 VOLTS	20 mA MAX LOAD
OUTPUT LEAKAGE CURRENT (2) (RELEASED) (OFF)	0.2μA	10μA	OUTPUT TRANSISTOR LEAKAGE
OUTPUT SWITCHING TIME (7) RISE TIME (REL. POINT) FALL TIME (OPER. POINT)	 6.2μS 0.1μS	 12μS 1μS	40mA LOAD TO 24 VOLTS 10% TO 90% 90% TO 10%

MECHANICAL CHARACTERISTICS (1)(3)(4)(13)

OPERATING RANGE	LEFT OR RIGHT OPERATE	RELEASE	DIFF	DIFFERENTIAL L TO R, R TO L
12 VDC, 25°C	1,19±0,20	-1,02±0,50	0,38± 0,33	2,21± 0,30
12V, 25°C TO 4.5V, -40°C	0,03± 0,25 △	-0,03±0,20 △		-0,03±0,45 △
12V, 25°C TO 24V, -40°C	0,05± 0,18 △	-0,03±0,15 △		-0,03±0,43 △
12V, 25°C TO 4.5V, 150°C	-0,03±0,46 △	-0,03±0,48 △		-0,03±0,83 △
12V, 25°C TO 24V, 150°C	0,03± 0,51 △	-0,03±0,51 △		-0,03±0,83 △

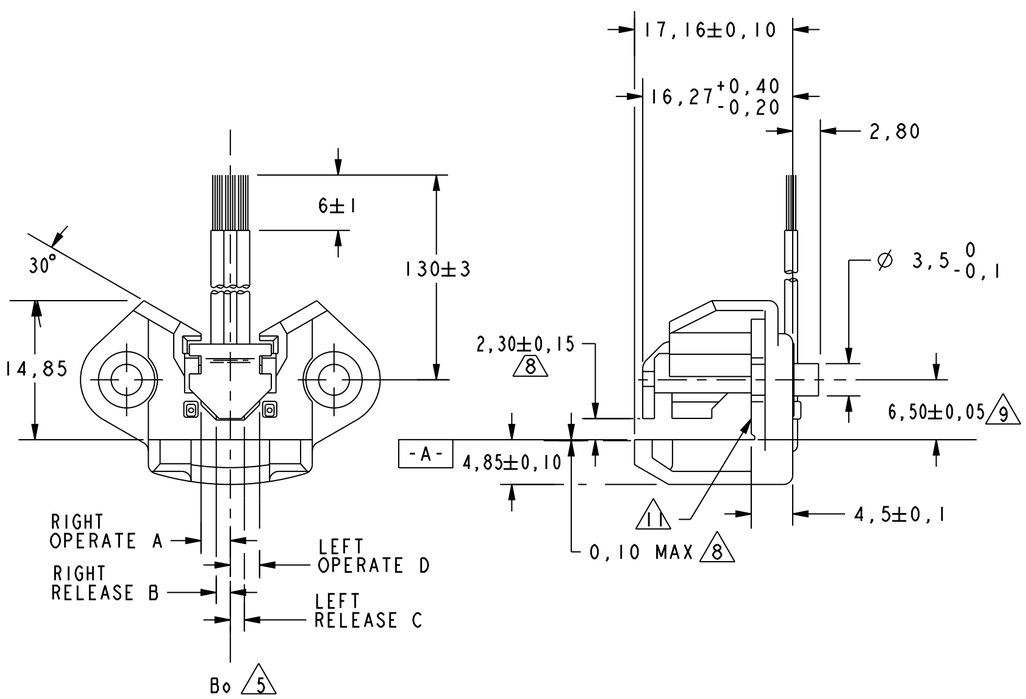

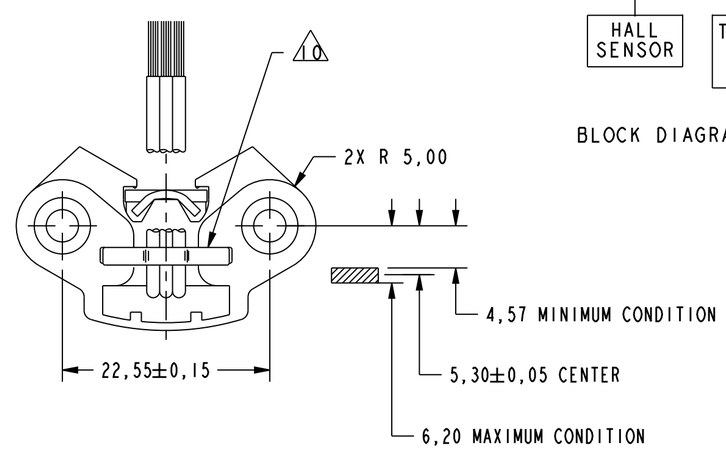

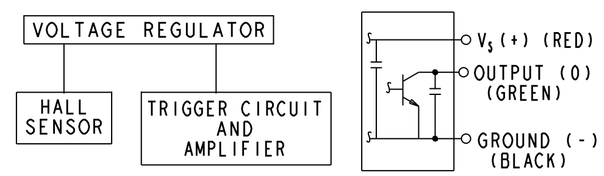

BLOCK DIAGRAM SHOWING CURRENT SINKING OUTPUT

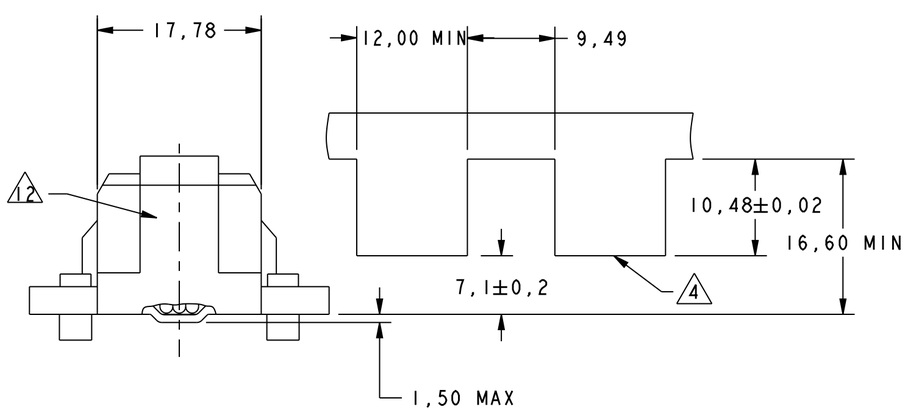

CAUTION ELECTROSTATIC SENSITIVE DEVICES DO NOT OPEN OR HANDLE EXCEPT AT A STATIC FREE WORKSTATION

ESD SENSITIVITY: CLASS 3

THIRD ANGLE PROJECTION

SCALE 2 : 1

DO NOT SCALE PRINT

TOLERANCES
APPLY TO DESIGN UNITS. CONVERSIONS ARE ONLY FOR REFERENCE. UNLESS NOTED. TOLERANCES ARE ±

	DIM. mm	TOL mm/in	DIM. in	TOL mm/in
NO PLACES	X	1/.04	X.X	0.8/.03
ONE PLACE	X.X	0.4/.016	X.XX	0.38/.015
TWO PLACES	X.XX	0.15/.006	X.XXX	0.13/.005
THREE PLACES				
ANGLES				

DESIGN UNITS: SI METRIC ☒ US CUSTOMARY ☐

WEIGHT

THIS DRAWING COVERS A PROPRIETARY ITEM AND IS THE PROPERTY OF MICRO SWITCH, A DIVISION OF HONEYWELL. THIS DRAWING IS NOT TO BE COPIED OR USED WITHOUT THE APPROVAL OF MICRO SWITCH.

MICRO SWITCH a Honeywell Division
FED. MFG. CODE 91929

SOLID STATE VANE SWITCH

CATALOG LISTING 2AV56

ANSI Y14.5M-1982 APPLIES

DRAWN	TSM	3 FEB 00	2D
CHECK			
SAV	3 FEB 00		
CHECK			
RS	11JUN10		
CHECK			
REPLACES			
RELEASE NO.	DR-4497		
PAGE	1 OF 1		
DRAWING NUMBER	2AV56		
ISSUE	9		

REVISIONS
A C095751 TSN 3 FEB 00
B 0066220 PRS 11JUN10

PTC/CAD

Downloaded from Arrow.com.